Interfacing Sensors and Signal Processing Components

Most voltage signals produced by sensors require signal processing before they can be converted to digital form or used to drive actuators. To avoid introducing errors into the data, a designer should be aware of problems and techniques common to interfacing sensors with signal processing components.

Ed Ramsden, Cherry Electrical Products

Many sensors provide a voltage output in response to a detected phenomenon. Most of these devices, though, don't produce signals strong enough to be fed directly into an A/D converter or to drive indicators or actuators. To remedy this, analog signal processing often has to boost the sensor's output.

Thevanin-Equivalent Model

Voltage-output transducers measure a variety of effects, but their electrical interfaces can be roughly modeled by an ideal voltage source in series with an impedance (see Figure 1). Even though the impedance can result from capacitance or inductance (and vary with signal frequency), it can still be considered a simple resistance for many back-of-envelope calculations.

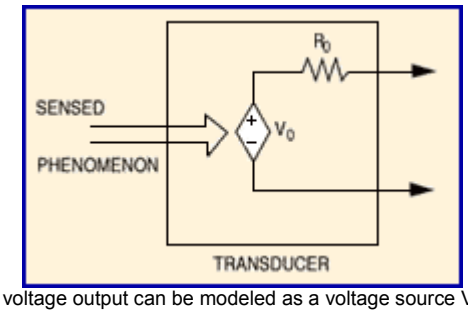

Figure 1. A transducer that provides a single voltage output can be modeled as a voltage source Vo in series with a resistor Ro. This approximation is called a Thevanin-equivalent circuit. Ro is commonly called the sensor's output impedance, and Vo is the sensor's zero-load output voltage.

Impedance limits the energy the signal source can deliver to a load. The same effect prevents you from starting your car's engine with 8 AA batteries in series (1.5 V each), even though the total voltage is the same as that of an automobile battery. The difference is that the equivalent resistance of the AA batteries is several orders of magnitude higher than that of the car battery, limiting the peak current they can deliver to a few amperes, as opposed to the several hundred amperes provided by a car battery.

Although few sensors must deliver amperes of current, many have high output impedances (i.e., $>10^6\ \Omega$) and are easy to improperly load. In the

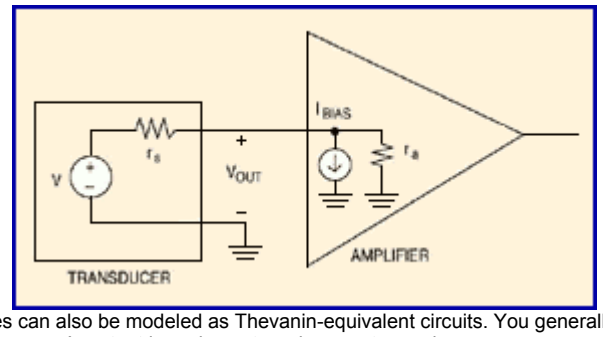

Figure 2. The inputs to amplifier stages can also be modeled as Thevanin-equivalent circuits. You generally want to use an amplifier with an input impedance much higher than the sensor's output impedance to reduce system gain errors.

case of a sensor output, a Thevanin equivalent circuit can describe the input to an amplifier or other interface circuit.

Figure 2 shows a sensor and an amplifier. The addition of the amplifier has two effects on the output of the sensor. First, the input impedance of the amplifier forms a voltage divider with the output impedance of the sensor, reducing the sensor's output voltage by:

$$V_{OUT} = V_{OUT}\left(\frac{R_0}{R_0 + R_s}\right)$$

The second effect is caused by the amplifier's bias current (input current source). Although this current is often in the nanoamp or picoamp range, it can cause input offset voltage errors of several millivolts for a sensor with sufficiently high output impedance (Ibias x Rs).

The lesson to be learned here is to select amplifiers with impedances much higher than those of the sensors you are going to use. Also, make sure the amplifiers have bias currents low enough to avoid creating unacceptable input offset errors.

Although the notion of matching input and output impedances is common in the RF, video, and audio worlds, it's usually neither necessary nor desirable for low-frequency signals (i.e., <1 kHz) that are carried over distances of a few meters or less. In most cases, the DC gain and offset errors caused by attempting to match an amplifier input impedance with a sensor output impedance (which can be highly variable anyhow) will far exceed the AC errors caused by mismatched impedances among sensor, interconnecting cable, and a high-impedance amplifier.

Single-Ended vs. Differential Measurements

A single voltage sensor output with respect to ground is called a single-ended output; transducers that provide two outputs, where the second either remains constant or changes with an opposite polarity to the first, produce differential or balanced outputs. Single-ended outputs have the advantage of simplicity, but they are more susceptible to interference and signal degradation than differential outputs. In cases where the sensor signal is small and rides

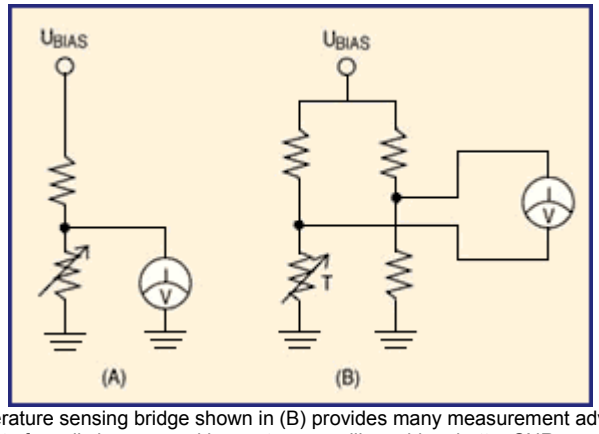

Figure 3. The differential output temperature sensing bridge shown in (B) provides many measurement advantages over the single-ended sensor of (A). It allows for easier measurement of small changes and in most cases will provide a better SNR.

on a significant DC bias, a balanced output lets you more easily discriminate changes, especially when the DC bias changes in response to environmental factors, such as temperature.

Figure 3 shows two thermistor-based temperature-sensing schemes; one is single-ended, and the other is differential. The differential scheme allows for an order of magnitude or more of sensitivity with the same voltmeter because most of the voltmeter's dynamic range isn't consumed in measuring the bias voltage level, as it is in a single-ended measurement.

Because differential measurement schemes are popular, single-IC instrumentation amplifiers (see "Instrumentation Amplifiers: A Tutorial," Sensors, September 1997) are available to amplify differential signals and convert them to single-ended signals for subsequent processing.

Ground and Isolation

Ground is the point at which the voltage is taken to be zero. Unfortunately, voltage levels at one ground are not always the same as they are at another, and this is where the problems begin. Ground variations (measured at the wall outlet) of a few tens of millivolts AC (60 Hz) are not uncommon in the same building. Such small variations don't often present major safety issues, but they can make remote voltage measurements difficult.

One approach is to make sure that the sensor being measured is grounded only at the amplifier inputs. For passive sensors (i.e., those requiring no external power to operate), the signal lead and the return can be brought straight to the amplifier. For active sensors, the technique is more difficult to use because voltage drops along the return lead can lift the ground at the sensor millivolts or even volts above the ground at the amplifier inputs.

You can avoid the problem by using a differential output sensor, which will cancel out a few hundred millivolts of sensor ground error. For single-ended

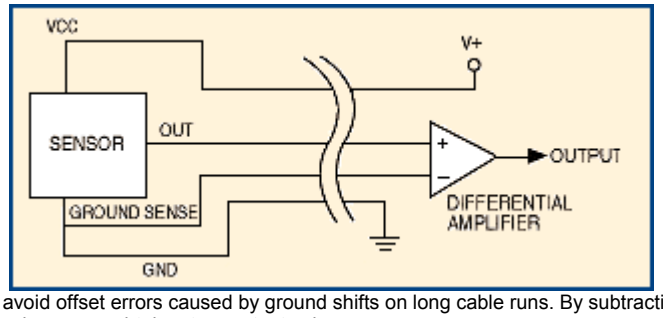

Figure 4. Remote sensing lets you avoid offset errors caused by ground shifts on long cable runs. By subtracting the ground potential at the sensor from the sensor's output signal, you can obtain a true output value.

sensors, a technique called remote ground sensing can be used (see Figure 4). By measuring the ground at the sensor and subtracting that value from the sensor output signal (using an instrumentation amplifier), you can obtain the true sensor output. This technique works because there is no voltage drop along wires that don't carry current, which is the case for the sensor output and ground sense leads if the instrumentation amplifier has sufficiently high input impedance and low input bias current.

Sometimes the difference in ground from the beginning of the measurement chain to its end is tens or hundreds of volts. In cases like these, simple differential or ground-sensing schemes won't yield effective results, and in many cases, using these schemes can damage the measuring equipment or injure the people operating it.

A technique called isolation often provides a way to bridge large differences in ground levels. The technique uses devices known as isolators, which allow signal levels to be communicated from their inputs to their outputs, but which have no electrical connection between the two. Isolators typically use an optical, magnetic, or capacitive bridge between the inputs and the outputs (see Figure 5). The input signal is converted to a proportional duty-cycle pulse stream, which is used to drive an LED. A photodiode on the output side of the isolator receives the optical pulses from the LED and outputs an electrical pulse stream that is then low-pass filtered.

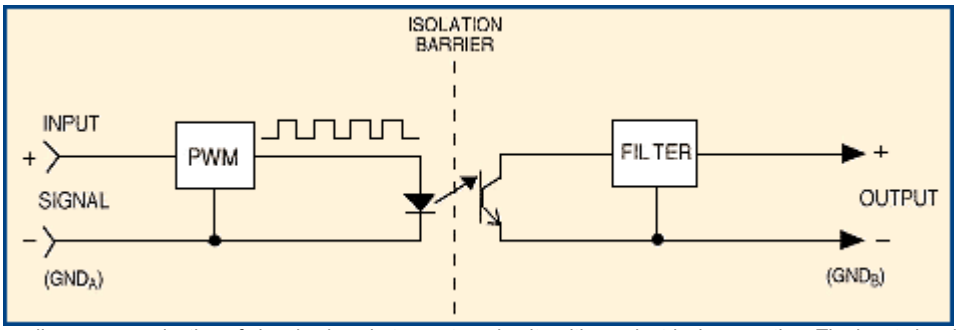

Figure 5. An isolator allows communication of signal values between two circuits with no electrical connection. The input signal is modulated onto a carrier, sent across the isolation barrier-in this case optically-and then demodulated on the other side. Optical, capacitive, and magnetic technologies are all commonly used to implement isolators.

In addition to protecting the measurement device from the system being measured, isolation is also used to protect the system being measured from the measurement device, particularly in medical applications. Isolation between a patient and medical instrumentation helps ensure that the patient will not be injured or killed by electric shock in the event of a malfunction or grounding problem with the instrument.

Low-Voltage Signals

Transducers often output microvolt signals, and you encounter difficulties when you try to accurately measure such small signals. The major difficulties are intrinsic noise from the sensor and the amplifier, thermal errors, and EMI.

Electronic devices produce electrical noise, and these noise sources set the lower bound on signal recovery. One such source is Johnson noise, which is generated by resistors. The noise is not dependent on the resistor type or construction, only on the resistor value in ohms and the resistor's temperature. Johnson noise voltage (RMS) for a resistor of R ohms is given by:

$$V_n = \sqrt{4kTRB}$$

where:

k = Boltzman's constant (1.38 x 10^{-23} J/°K)

T = temperature in °K

B = bandwidth in Hz

At room temperature (293ºK), a 1 KΩ resistor generates 0.4 µV of noise over a 10 kHz bandwidth. The Johnson noise developed by a transducer's output resistance sets the lower limit on the recoverable signal. In many cases, however, the noise sources peculiar to a particular type or model of transducer can be an order of magnitude greater than the Johnson noise.

Solid-state amplifiers also contribute noise to the signal processing chain. Although several effects contribute to the noise performance of an

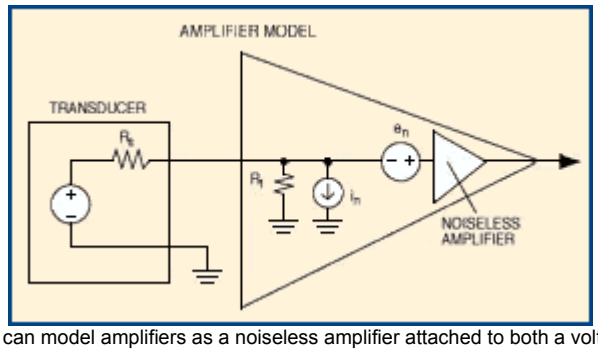

Figure 6. To estimate input noise, you can model amplifiers as a noiseless amplifier attached to both a voltage noise source and a current noise source. The current noise source is transformed into additional voltage noise as it passes through the various impedances in the circuit.

amplifier, amplifiers can be well characterized by an equivalent input voltage noise (en) and an equivalent input current noise (in), both of which vary over frequency (see Figure 6).

Voltage noise is specified as if it were a voltage source placed in series with the input of a noiseless amplifier. Current noise is specified as a current source in parallel with the amplifier input and converted to voltage noise by flowing through the output impedance of the transducer in parallel with the amplifier's input impedance. Because the two noise sources are uncorrelated, their voltages do not simply add; an expression for total input noise is given by:

$$V_n = \sqrt{e_n^2 + \left(\frac{i_n \cdot R_s \cdot R_i}{R_s + R_i}\right)^2}$$

Because the voltage and current noise sources are independent of each other, the choice of amplifier technology (Bipolar or FET) is dependent on the source impedance of the transducer. Bipolar amplifiers tend to have lower input voltage noise, and FET amplifiers have lower input current noise, at least when considering top-grade devices. Thus, for low-impedance transducers, a bipolar front-end amplifier may be the best choice because voltage noise will be higher than current noise, and for high-impedance sources, an FET front end may be the better choice because input current noise will be the most troublesome.

A popular temperature sensor, the thermocouple, consists of a junction of two different metals, which develops a temperature-dependent voltage. The thermoelectric voltage is typically quite small (microvolts) and can be a challenge to measure accurately.

A similar but opposite situation exists when you try to measure microvolt signals. Every bimetallic junction in a measurement circuit (e.g., solder joints and wire connections) contributes a small, temperature-dependent error voltage. The challenge then is to be able to ignore the effects of the parasitic thermocouple signals so that you can accurately measure the signal of interest.

Figure 7 shows one method of reducing thermocouple effects by using a differential output sensor and amplifier. If you make the junctions identical, both in construction and temperature, in each of the signal paths, the thermocouple voltages in each path will be equal. The differential amplifier will then subtract these voltages from each other.

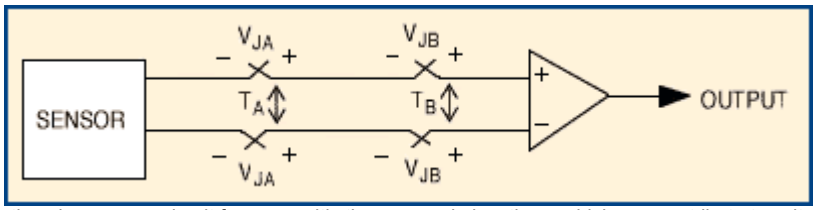

Figure 7. Bimetallic connections in a sensor circuit form parasitic thermocouple junctions, which can contribute to voltage offset errors. You can reduce this effect by using identical and opposite connections in both the signal and return paths, making sure that corresponding junctions are at the same temperature.

Thermally induced errors also occur when components—such as resistors—are heated unevenly from terminal to terminal. This condition will result in the development of a small voltage because electronic components contain materials that form internal junctions. You can reduce this effect by orienting components in such a way that they are perpendicular to temperature gradients inside the instrument. This way the component sees a uniform temperature along its length.

Low-frequency (or quasistatic) magnetic fields—typically generated by power transformers and actuators (e.g., motors and solenoids)—readily couple

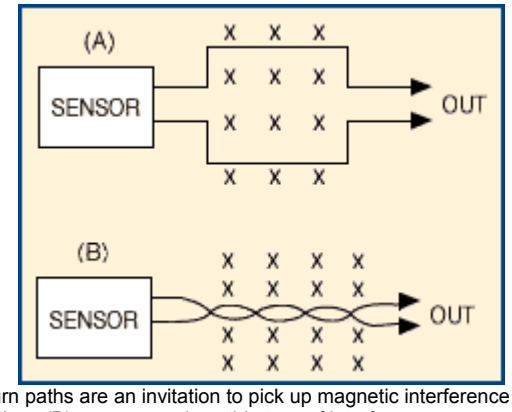

Figure 8. Open loops in the signal and return paths are an invitation to pick up magnetic interference (A). By keeping loop areas small--such as through the use of twisted-pair interconnections (B)--you can reduce this type of interference.

into circuits, even those operating at low-impedance levels. At low frequencies (60 Hz), the dominant coupling mechanism is inductive pickup, where a voltage is developed around a loop of the signal path (see Figure 8). The magnitude of the resultant voltage is proportional to both the strength of the interfering field and the amount of loop area it intersects. You can reduce this interference by physically separating the source and the sensitive circuits, shielding the circuits from the source, or eliminating loops in sensitive signal paths.

Physical separation is often effective because quasistatic magnetic fields drop off with the cube of the distance, so a modest amount of space between the source and the point of reception can make a big difference in the magnitude of spurious signals.

Shielding a circuit from low-frequency magnetic interference is difficult. Lines of magnetic flux do not terminate but form closed loops. The only way to shield a circuitry is to shunt a field around the region. Also, at low frequencies, magnetic fields go right through common shielding materials (e.g., aluminum and copper). So you have to use high-permeability materials (e.g., iron and Mumetal) to construct effective shields. A copper shield that is effective at reducing RFI may be totally ineffective at keeping a circuit from picking up 60 Hz hum from a transformer 4 in. away.

Reducing the pickup area is an effective tactic for reducing interference from low-frequency magnetic sources. A common approach is to carry the signal on twisted-pair cable (see Figure 8), which provides nearly zero loop area on which magnetic fields can couple.

High-Impedance Signals

Even when the transducer provides a high-level output (hundreds of millivolts), it can still be difficult to recover the signal if the transducer's output impedance is sufficiently high. There are three main types of problems you can encounter with high-impedance sources:

- Stray leakage current
- Low-pass filtering from parasitic capacitors
- Capacitive pickup (EMI)

Leakage current arises because the copper conductors used for cabling and PCB traces are not the only electrical conductors in a circuit. The

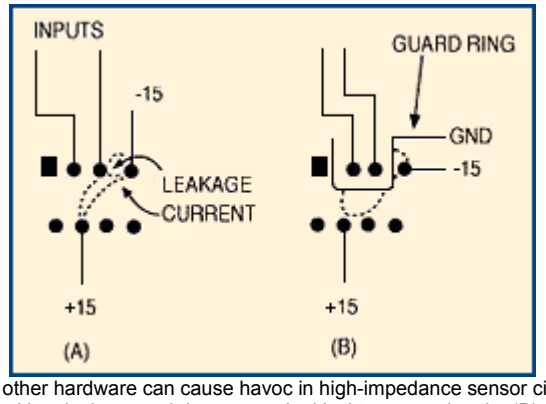

Figure 9. Leakage currents on PCBs and other hardware can cause havoc in high-impedance sensor circuits (A). You can reduce this effect by making sure everything is clean and dry and by placing guard rings around critical traces and paths (B).

surfaces of PCBs and mounting hardware can also conduct small currents, particularly in humid conditions or when they are contaminated. Figure 9 shows PCB leakage from the power supply pins of an operational amplifier to the input pins. The current may only be in the picoamp or nanoamp range, but if it flows into a sensor output with a 100 MΩ output impedance, it can result in millivolt range offset errors.

The solution is to put a guard ring around the input terminals of the operational amplifier. The guard ring intercepts stray current headed toward the inputs and diverts it to ground. If the input terminals are normally at a potential other than ground, you'll want to bias up the guard ring to that voltage. Many instrumentation amplifiers have outputs explicitly for driving a guard at an appropriate voltage.

Another technique for reducing leakage is to keep everything clean and dry. One notorious contaminant is the residue from solder flux, especially the organic and water-soluble types. These residues readily absorb water from the air and make the surfaces they cover conductive. Even nonprecision analog circuitry can malfunction because a circuit board was inadequately cleaned.

Another common problem encountered with high-impedance signal sources is unintentional low-pass filtering by parasitic capacitors (see Figure 10). The input of a front-end amplifier may present 5-20 pF to the transducer, and the cables that connect to the transducer may load it down by 20-100 pF/ft. A 100 MΩ source with a 100 pF capacitor hanging off it will have a high-frequency rolloff point of only about 16 Hz and significant phase and magnitude errors at even lower frequencies.

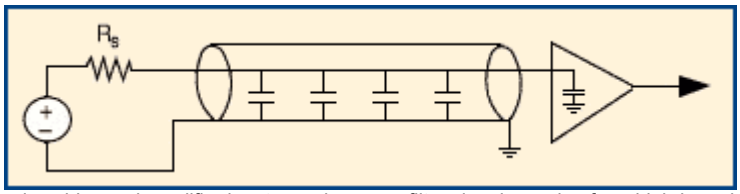

Figure 10. Parasitic capacitance in cables and amplifier inputs can low-pass filter signals coming from high-impedance sensors. Short interconnects and low-input capacitance amplifiers are one way to reduce this problem.

Other than the obvious strategies for reducing parasitic capacitance through shorter transducer-to-front end runs and the use of low-capacitance cables and low-input capacitance amplifiers (all good ideas), the best way to deal with this problem is to use an active guard (see Figure 11). An active guard feeds a replica of the input signal to a shield surrounding the signal conductor, as opposed to connecting the shield to ground. Because the voltage in the guard follows the signal conductor voltage, the total change in their difference remains zero. Thus, there is effectively no capacitance between them.

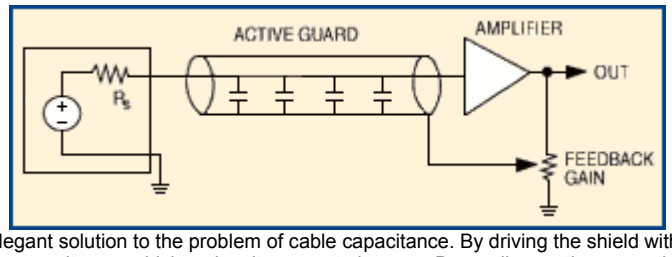

Figure 11. An active guard is an elegant solution to the problem of cable capacitance. By driving the shield with a replica of the input signal, you don't charge or discharge the cable capacitance, which makes it appear to be zero. Depending on the properties of the sensor and amplifier, however, you may have to adjust the amount of signal you feed back to maintain stability.

One problem that you frequently encounter when using a dynamic guard is that of stability. Depending on the characteristics of the transducer and the front-end amplifier, you may have to reduce the feedback gain to less than one to prevent the system from oscillating. The potentiometer shown in Figure 10 provides such a gain-control function.

Capacitive pickup occurs when a nearby time-varying signal line couples into the signal line of interest (see Figure 12). High-impedance signal

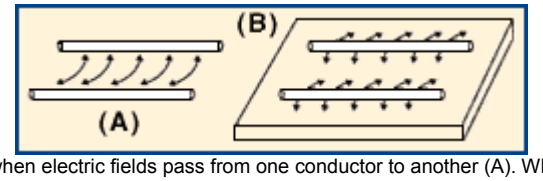

Figure 12. Electrostatic coupling occurs when electric fields pass from one conductor to another (A). While providing continuous shields around the conductors can greatly reduce the problem, in many cases the use of a nearby groundplane (B) will also suffice. The groundplane swallows stray fields emanating from the conductors. This is easy to implement on PCBs.

lines are especially susceptible to this problem because the coupling capacitance—which may be only in the picofarad range—can have lower impedance at frequencies of interest than the transducer. As the frequency of the interfering signal increases, the coupling capacitance's impedance drops.

To fix this type of problem, you can either move the offending source away or shield the sensitive circuit. While the term shielding often invokes visions of coaxial cable and die-cast metal boxes (sometimes the only effective options), it can also take less costly forms. The ground plane shown in Figure 12 is one such method. By "swallowing" lines of electric field emanating from the signal source, the technique reduces the mutual coupling between the conductors. Ground planes are easily fabricated on PCBs and flex circuits, making them one of the most easily manufactured shielding approaches.

Shielded cable is also useful for reducing capacitively coupled interference (in addition to RF interference in general) because offending fields are stopped at the shield. Remember, however, that for maximum effectiveness, a shield must be grounded. Grounding it at one end (usually the one closest to the front-end amplifier) is usually the best method. Grounding the shield at both ends can cause problems resulting from currents running along the shield. There are several styles of shield: foil with drain wire, spiral wrapped, and braided. Although cable that has a braided shield looks more impressive than cable with a foil shield and drain wire, both are effective at moderate frequencies.

Signal Conditioning Tutorial

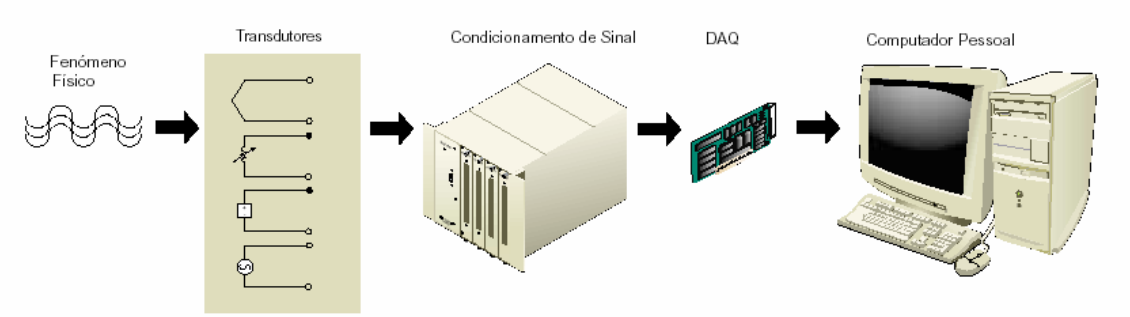

Computer-based measurement systems are used in a wide variety of applications. In laboratories, in field services and on manufacturing plant floors, these systems act as general-purpose measurement tools well suited for measuring voltage signals. However, many real-world sensors and transducers require signal conditioning before a computer-based measurement system can effectively and accurately acquire the signal. The front-end signal conditioning system can include functions such as signal amplification, attenuation, filtering, electrical isolation, simultaneous sampling, and multiplexing. In addition, many transducers require excitation currents or voltages, bridge completion, linearization, or high amplification for proper and accurate operation. Therefore, most computer-based measurement systems include some form of signal conditioning in addition to plug-in data acquisition DAQ devices, as shown in Figure 1.

This application note introduces the fundamentals of using front-end signal conditioning hardware with computer-based measurement systems. First, the signal conditioning requirements of the most common transducers are discussed. This application note also describes some general signal conditioning functions and briefly discusses the role of signal conditioning products such as the National Instruments Signal Conditioning eXtension for Instrumentation (SCXI) or Signal Conditioning Components (SCC) product lines.

Transdutores

Transducers are devices that convert one type of physical phenomenon, such as temperature, strain, pressure, or light into another. The most common transducers convert physical quantities to electrical quantities, such as voltage or resistance. Transducer characteristics define many of the signal conditioning requirements of your measurement system. Table 1 summarizes the basic characteristics and conditioning requirements of some common transducers.

Sensor	Electrical Characteristics	Signal Conditioning Requirement
Thermocouple	Low-voltage output Low sensitivity Nonlinear output	Reference temperature sensor (for cold-junction compensation) High amplification Linearization
RTD	Low resistance (100 ohms typical) Low sensitivity Nonlinear output	Current excitation Four-wire/three-wire configuration Linearization
Strain gauge	Low resistance device Low sensitivity Nonlinear output	Voltage or current excitation High amplification Bridge completion Linearization

		Shunt calibration
Current output device	Current loop output (4 -- 20 mA typical)	Precision resistor
Thermistor	Resistive device High resistance and sensitivity Very nonlinear output	Current excitation or voltage excitation with reference resistor Linearization
Active Accelerometers	High-level voltage or current output Linear output	Power source Moderate amplification
AC Linear Variable Differential Transformer (LVDT)	AC voltage output	AC excitation Demodulation Linearization

Table 1. Electrical Characteristics and Basic Signal Conditioning Requirements of Common Transducers

Thermocouples

The most popular transducer for measuring temperature is the thermocouple. The thermocouple is an inexpensive, rugged device that can operate over a very wide range of temperatures. However, the thermocouple has unique signal conditioning requirements.

A thermocouple operates on the principle that the junction of two dissimilar metals generates a voltage that varies with temperature. Measuring this voltage is difficult because connecting the thermocouple to the terminals of a DAQ board creates what is called the reference junction or cold junction, shown in Figure 2.These additional junctions act as thermocouples themselves and produce their own voltages. Thus, the final measured voltage, VMEAS, includes both the thermocouple and cold junction voltages. The method used to compensate for these unwanted cold-junction voltages is called cold-junction compensation.

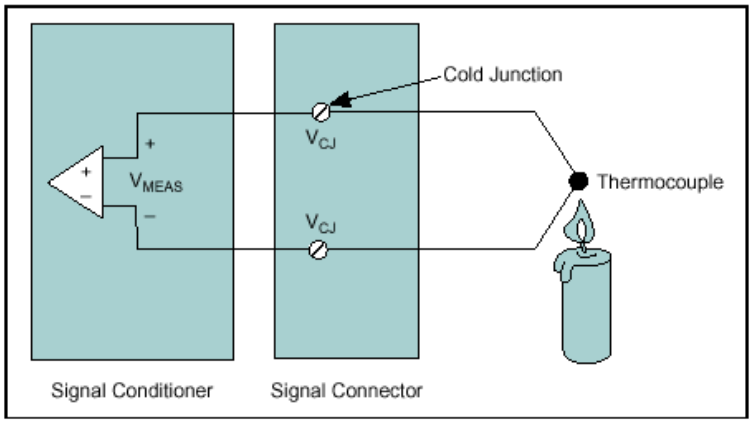

Figure 2. The connection of thermocouple wires to a measurement system creates an additional thermoelectric junction, called the cold junction, which must be compensated for with signal conditioning.

There are two general approaches to cold-junction compensation -- hardware and software compensation. Hardware compensation uses a special circuit that applies the appropriate voltage to cancel the cold-junction voltage. Although you need no software for hardware compensation, each thermocouple type must have its own compensation circuit that works at all ambient temperatures.

Cold-junction compensation in software, on the other hand, is very flexible and requires only knowing the ambient temperature. If you use an additional sensor to directly measure the ambient temperature at the cold junction, you can compute the appropriate compensation for the unwanted thermoelectric voltages. This approach is why many signal conditioning accessories are equipped with direct-reading temperature sensors, such as thermistors or semiconductor sensors.

Software cold-junction compensation follows this process:

1. Measure the temperature of the reference junction and compute the equivalent thermocouple voltage for this junction using standard thermocouple tables or polynomials.

2. Measure the output voltage (V_{MEAS}) and add -- not subtract -- the reference-junction voltage computed in Step 1.

3. Convert the resulting voltage to temperature using standard thermocouple polynomials or look-up tables.

Sensitivity is another characteristic to consider with thermocouple measurements. Thermocouple outputs are very low level and change only 7 to 50 µV for every 1 °C change in temperature. You can increase the sensitivity of the system with a low-noise, high-gain amplification of the signal. For example, a plug-in DAQ board with an analogue input range of ±5 V, an amplifier gain of 100, and a 12-bit analogue-to-digital converter (ADC) has the following resolution:

$$\frac{10\ \text{V}}{(2^{12}) \cdot 100} = 24.4\ \mu\text{V/bit}$$

The same DAQ board with a signal conditioning amplifier gain of 1000 has a resolution of 2.4 µV/bit, which corresponds to a fraction of a degree Celsius. More importantly, an external signal conditioner can amplify the low-level thermocouple signal near the source to minimize noise corruption. A high-level amplified signal suffers much less corruption from radiated noise in the environment.

RTDs

Another popular temperature sensing device is the RTD, which is known for its stability and accuracy over a wide temperature range. An RTD consists of a wire coil or deposited film of pure metal whose resistance increases with temperature. Although different types of RTDs are available the most popular type is made of platinum and has a nominal resistance of 100 ohms at 0 °C.

Because RTDs are passive resistive devices, you must pass a current through the RTD to produce a voltage that a DAQ board can measure. RTDs have relatively low resistance (100 ohms) that changes only slightly with temperature (less than 0.4 ohms/°C), so you might need to use special configurations that minimize errors from lead wire resistance.

For example, consider the measurement of a 2-wire RTD in Figure 3. With this RTD, labeled RT, the voltage drops caused by the excitation current, IEXC, passing through the lead resistance, RL, add to the measured voltage, V_O.

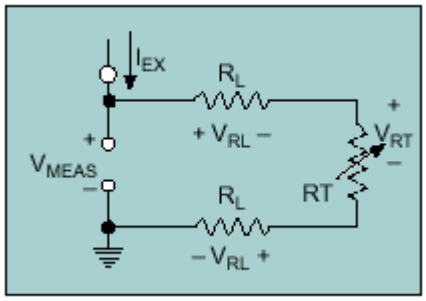

Figure 3. 2-Wire RTD Measurement

For longer lead length, the 4-wire RTD in Figure 4 is a better choice. With a 4-wire RTD, one pair of wires carries the excitation current through the RTD; the other pair senses the voltage across the RTD. Because only negligible current flows through the sensing wires, the lead resistance error is very small.

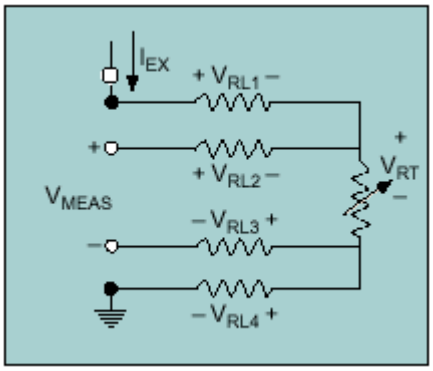

Figure 4. 4-Wire RTD Measurement

To keep costs down, RTDs are also available in 3-wire configurations. The 3-wire RTD is most effective in a Wheatstone bridge configuration (see the following Strain Gauges section). In this configuration, the lead resistances are located in opposite arms of the bridge, so their errors cancel each other out.

Strain Gauges

The strain gauge is the most common device used in mechanical testing and measurements. The most common type is the bonded resistance strain gauge, which consists of a grid of very fine foil or wire. The electrical resistance of the grid varies linearly with the strain applied to the device. When using a strain gauge, you bond the strain gauge to the device under test, apply force, and measure the strain by detecting changes in resistance. Strain gauges are also used in sensors that detect force or other derived quantities, such as acceleration, pressure, and vibration. These sensors generally contain a pressure sensitive diaphragm with strain gauges mounted to the diaphragm.

Because strain measurement requires detecting relatively small changes in resistance, the Wheatstone bridge circuit is almost always used. The Wheatstone bridge circuit consists of four resistive elements with a voltage excitation supply applied to the ends of the bridge. Strain gauges can occupy one, two or four arms of the bridge, with any remaining positions filled with fixed resistors. Figure 5 shows a configuration with a half-bridge strain gauge consisting of two strain gauge elements, R_{G1} and R_{G2}, combined with two fixed resistors, R_1 and R_2.

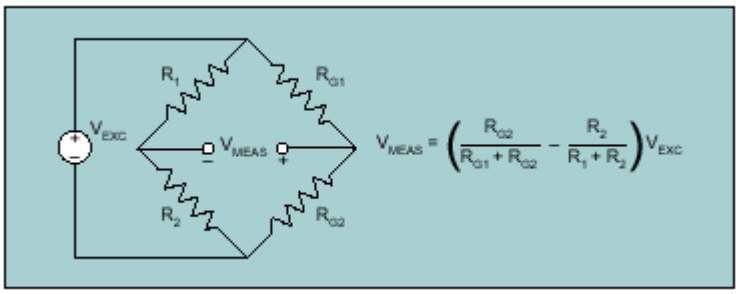

Figure 5. Half-Bridge Strain Gauge Configuration

With a voltage, V_{EXC}, powering the bridge the DAQ system measures the voltage across the bridge:

$$V_O = \left(\frac{R_{G2}}{R_{G1} + R_{G2}} - \frac{R_2}{R_1 + R_2}\right) \cdot V_{EXC}$$

When the ratio of RG1 to RG2 equals the ratio of R1 to R2, the measured voltage VO is 0 V. This condition is referred to as a balanced bridge. As strain is applied to the gauge, their resistance values change, causing a change in the voltage at VO. Full-bridge and half bridge strain gauges are designed to maximize sensitivity by arranging the strain gauge elements in opposing directions.

For example, the half-bridge strain gauge in Figure 5 includes an element RG1, which is installed so that its resistance increases with positive strain, and an element RG2, whose resistance decreases with positive strain. The resulting VO responds with sensitivity that is twice that of a quarter-bridge configuration.

Some signal conditioning products have voltage excitation sources, as well as provisions for bridge-completion resistors. Bridge completion resistors should be very precise and stable. Because strain-gauge bridges are rarely perfectly balanced, some signal conditioning systems also perform nulling.

Nulling is a process in which you adjust the resistance ratio of the unstrained bridge to balance the bridge and remove any initial DC offset voltage. Alternatively, you can measure this initial offset voltage and use this measurement in your conversion routines to compensate for unbalanced initial condition.

Accelerometers

An accelerometer is a device commonly used to measure acceleration and vibration. It consists of a known mass attached to a piezoelectric element. As the accelerometer moves, the mass applies force to the element and generates a charge. By reading this charge, you can determine acceleration. Accelerometers are directional, measuring acceleration along only one axis. To monitor acceleration in three dimensions, choose a multiaxis accelerometer.

Accelerometers are available in two types, passive and active. Passive accelerometers send out the charge generated by the piezoelectric element. Because the signal is very small, passive accelerometers require a charge amplifier to boost the signal and serve as a very high impedance buffer for your measurement device. Active accelerometers include internal circuitry to convert the accelerometer charge into a voltage signal, but require a constant current source to drive the circuitry.

LVDTs

A linear voltage differential transformer (LVDT) is a device commonly used to measure linear displacement. An LVDT consists of a stationary coil assembly and a movable core (see Figure 6). The coil assembly houses a primary and two secondary windings. The core is a steel rod of high magnetic permeability, and is smaller in diameter than the internal bore of the coil assembly, so you can mount the rod and assure that no contact is made with the coil assembly. Thus the rod can move back and forth without friction or wear.

When an AC excitation voltage is applied to the primary winding, a voltage is induced in each secondary winding through the magnetic core. The position of the core determines how strongly the excitation signal couples to each secondary winding. When the core is in the center, the voltage of each secondary coil is equal and 180 degrees out of phase, resulting in no signal. As the core travels to the left of center, the primary coil is more tightly coupled to the left secondary coil, creating an output signal in phase with the

excitation signal. As the core travels to the right of center, the primary coil is more tightly coupled to the right secondary coil, creating an output signal 180 degrees out of phase with the excitation voltage.

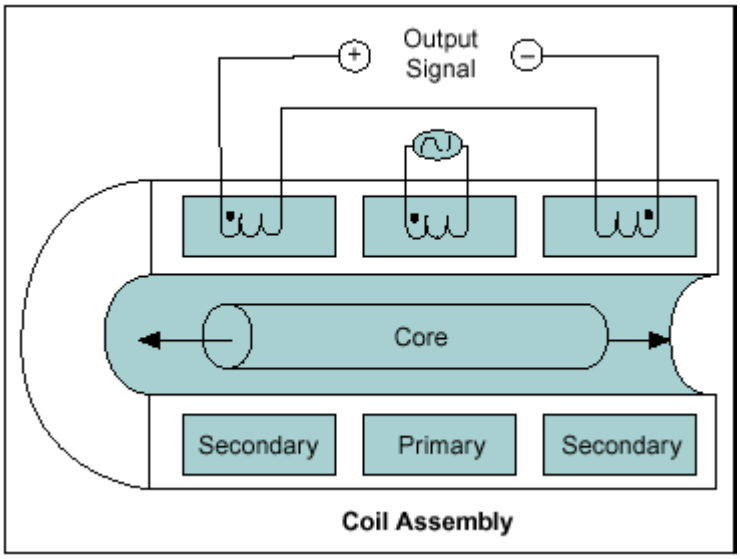

Figure 6. Cross Section of an LVDT

Current Signals

Many sensors used in process control and monitoring applications generate a current signal, usually 4 to 20 mA or 0 to 20 mA. Current signals are sometimes used because they are less sensitive to errors such as radiated noise and voltage drops due to lead resistance. Signal conditioning systems must convert this current signal to a voltage signal. To do this easily, pass the current signal through a resistor, as shown in Figure 7.

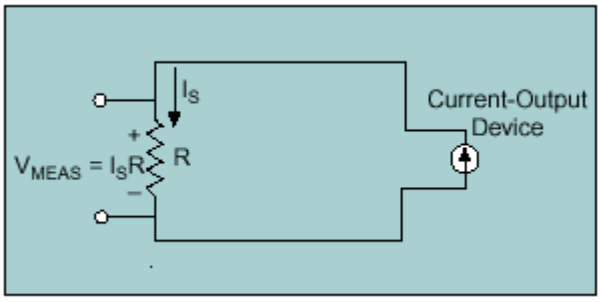

Figure 7. Process current signals, usually 0 to 20 mA or 4 to 20 mA, are converted to voltage signals using precision resistors.

You can then use a DAQ system to measure the voltage $V_O = I_S R$ that will be generated across the resistor, where I_S is the current and R is the resistance. Select a resistor value that has a usable range of voltages, and use a high-precision resistor with a low temperature coefficient. For example, a 249 ohm, 0.1%, 5 ppm/°C resistor, converts a 4 to 20 mA current signal into a voltage signal that varies from 0.996 to 4.98 V.

General Signal Conditioning Functions

Regardless of the types of sensors or transducers you are using, the proper signal conditioning equipment can improve the quality and performance of your system. Signal conditioning functions are useful for all types of signals, including amplification, filtering, and isolation.

Amplification

Because real-world signals are often very small in magnitude, signal conditioning can improve the accuracy of your data. Amplifiers boost the level of the input signal to better match the range of the analogue-to-digital

converter (ADC), thus increasing the resolution and sensitivity of the measurement. While many DAQ devices include onboard amplifiers for this reason, many transducers, such a thermocouples, require additional amplification.

In addition, using external signal conditioners located closer to the signal source, or transducer, improves the signal-to-noise ratio of the measurement by boosting the signal level before it is affected by environmental noise.

Attenuation

Attenuation is the opposite of amplification. It is necessary when the voltages to be digitised are beyond the input range of the digitiser. This form of signal conditioning diminishes the amplitude of the input signal so that the conditioned signal is within range of the ADC. Attenuation is necessary for measuring high voltages.

Filtering

Additionally, signal conditioners can include filters to reject unwanted noise within a certain frequency range. Almost all DAQ applications are subject to some level of 50 or 60 Hz noise picked up from power lines or machinery. Therefore, most conditioners include low pass filters designed specifically to provide maximum rejection of 50 to 60Hz noise.

Another common use of filters is to prevent signal aliasing -- a phenomenon that arises when a signal is under sampled (sampled too slowly). The Nyquist theorem states that when you sample an analogue signal, any signal components at frequencies greater than one-half the sampling frequency appear in the sampled data as a lower frequency signal. You can avoid this signal distortion only by removing any signal components above one-half the sampling frequency with low pass filters before the signal is sampled.

Isolation

Improper grounding of the system is one of the most common causes for measurement problems, including noise and damaged measurement devices. Signal conditioners with isolation can prevent most of these problems. Such devices pass the signal from its source to the measurement device without a physical connection by using transformer, optical, or capacitive coupling techniques. Besides breaking ground loops, isolation blocks high-voltage surges and rejects high common-mode voltage and thus protects both the operators and expensive measurement equipment.

Multiplexing

Typically, the digitizer is the most expensive part of a data acquisition system. By multiplexing, you can sequentially route a number of signals into a single digitizer, thus achieving a cost-effective way to greatly expand the signal count of your system. Multiplexing is necessary for any high-channel-count application.

Simultaneous Sampling

When it is critical to measure two or more signals at the same instant in time, simultaneous sampling is required. Front-end signal conditioning can provide a much more cost-effective simultaneous sampling

solution than purchasing a digitizer for each channel. Typical applications that might require simultaneous sampling include vibration measurements and phase difference measurements.

Digital Signal Conditioning

Digital signals can also require signal conditioning peripherals. Typically, you should not connect digital signals used in research and industrial environments directly to a DAQ board without some type of isolation because of the possibility of large voltage spikes or large common voltages. Some signal conditioning modules and boards optically isolate the digital I/O signals to remove these spurious signals. Digital I/O signals can control electromechanical or solid-state relays to switch loads such as solenoids, lights, and motors. You can also use solid-state relays to sense high-voltage field signals and convert them to digital signals.

Signal Conditioning Systems

The signal conditioning functions discussed in this application note are implemented in different types of signal conditioning products. These products cover a very wide range of price and capability.

SCXI

SCXI is a front-end signal conditioning and switching system for various measurement devices, including plug-in data acquisition and DMM devices. An SCXI system consists of a rugged chassis that houses shielded signal conditioning modules that amplify, filter, isolate, and multiplex analog signals from thermocouples or other transducers. SCXI is designed for large measurement systems or systems requiring high-speed acquisition.

System features include:

- Modular architecture -- choose your measurement technology
- Expandability -- expand your system to 3,072 channels
- Integration -- combine analog input, analog output, digital I/O, and switching into a single, unified platform
- High bandwidth -- acquire signals at an aggregate rate up to 333 kHz
- Connectivity -- select from SCXI modules with thermocouple connectors or terminal blocks

For complete information about the SCXI product line, please visit ni.com/sigcon.

SCC

SCC is a front-end signal conditioning system for E Series plug-in data acquisition devices. An SCC system consists of a shielded carrier that holds up to 20 single or dual-channel SCC modules for conditioning thermocouples and other transducers. SCC is designed for small measurement systems where you need only a few channels of each signal type, or for portable applications. SCC systems also offer the most comprehensive and flexible signal connectivity options.

System features include:

- Modular architecture -- select your measurement technology on a per-channel basis
- Small-channel systems -- condition up to 16 analog input and eight digital I/O lines
- Low-profile/portable -- integrates well with other laptop computer measurement technologies
- High bandwidth -- acquire signals at rates up to 1.25 MHz
- Connectivity -- incorporates panelette technology to offer custom connectivity to thermocouple, BNC, LEMO®(B Series), and MIL-Spec connectors

For complete information about the SCC product line, visit ni.com/sigcon.

5B Series

5B is a front-end signal conditioning system for plug-in data acquisition devices. A 5B system consists of eight or 16 single-channel modules that plug into a backplane for conditioning thermocouples and other analog signals. National Instruments offers a complete line of 5B modules, carriers, backplanes, and accessories. For more information, visit ni.com/sigcon.

FieldPoint

FieldPoint is a distributed measurement system for monitoring or controlling signals in light industrial applications. A FieldPoint system includes a serial or Ethernet network module and up to nine I/O modules in a bank. Each I/O module can measure eight or 16 channels. FieldPoint is designed for applications with small clusters of I/O points at several different locations. FieldPoint is also an attractive solution for cost-sensitive applications performing low-speed monitoring.

System features include:

- Modular architecture -- select your measurement technology on a per-module basis
- Expandability -- network multiple banks to a single system
- Integration -- combine analog input, analog output, digital I/O, and switching into a single, unified platform
- Low-speed monitoring -- up to 100 Hz
- Light-industrial grade -- 70 °C temperature range, hot-swappable, programmable start-up states, watchdog timers.